Elliston®

18" Towel Bar

K-R72784

Features

- Coordinates with Elliston faucets and accessories.

Material

- Premium metal construction for durability and reliability.
- KOHLER finishes resist corrosion and tarnishing.

Installation

- Installation template and tools included.

Recommended Products/Accessories

K-23723 Faucet cleaner

Included Components

Additional Components:

Installation hardware
template

Codes/Standards

None Applicable

KOHLER® Faucet Lifetime Limited Warranty

See website for detailed warranty information.

Available Colors/Finishes

Color tiles intended for reference only.

Color	Code	Description
	CP	Polished Chrome
	BN	Vibrant® Brushed Nickel

Elliston®

18" Towel Bar

K-R72784

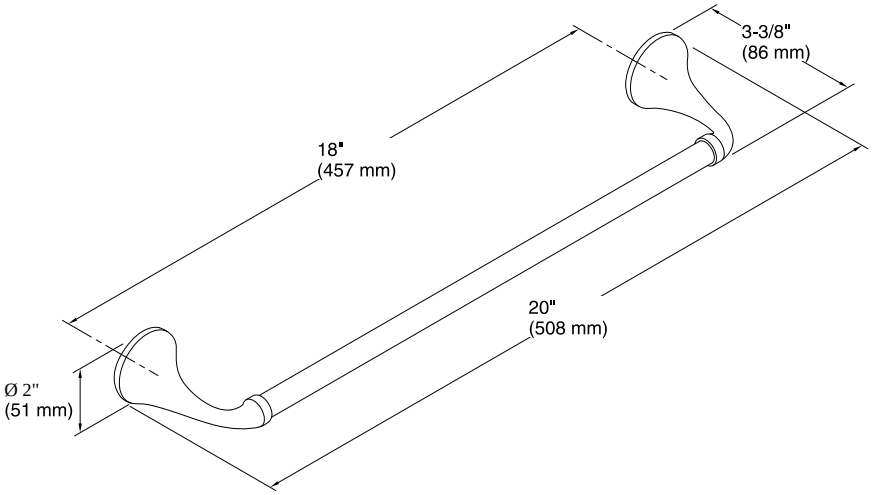

Technical Information

All product dimensions are nominal.

Material:	Metal

Notes

Install this product according to the installation guide.

CAUTION: Risk of personal injury. Do not install these products in any area where they are likely to be used inadvertently as a grab bar or support bar. These products are not designed or intended for use as a grab bar or support bar.